Valvole a rapida chiusura a mezzo cavo metallico PN6-PN16-ANSI150
Quick closing valves by means of metallic cable NP6-NP16-ANSI150

Tab.131

RF FLANGES: A/GS
FF FLANGES: B/G

Conform to:
UNI EN1092
ANSI B16.5

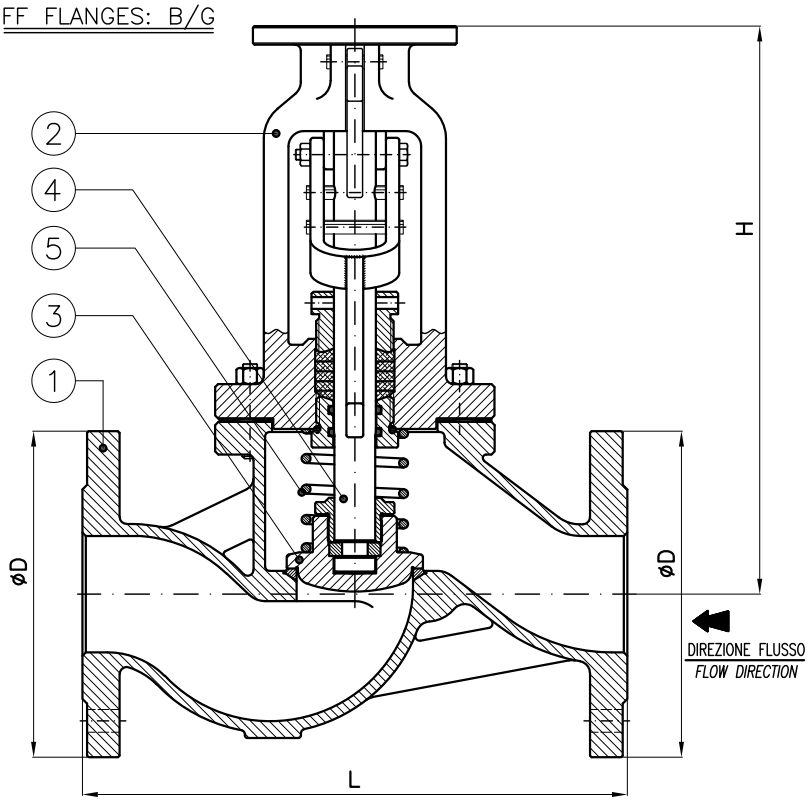

Tab.131.1

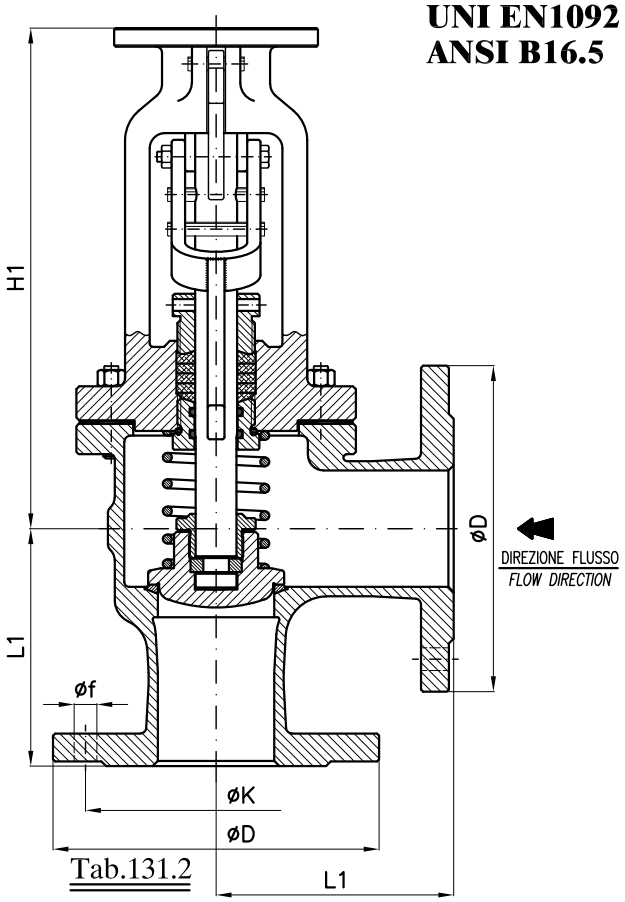

Tab.131.2

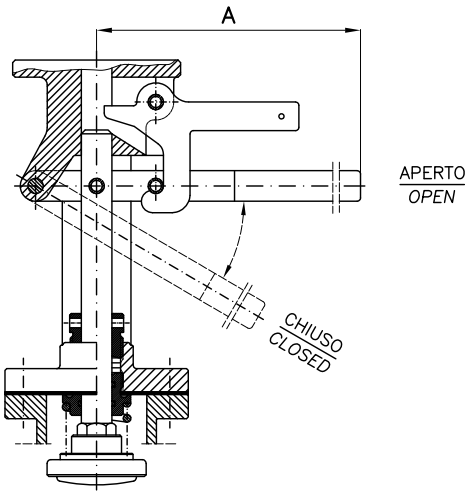

Accessorio a richiesta
Optional accessory

N° 1 finecorsa FD 502 con basetta
NO. 1 Switch FD 502 with base

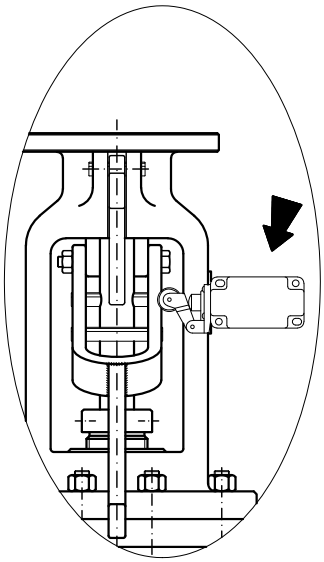

DN	A	H	L	Weight (≃Kg)	H1	L1	Weight (≃Kg)	D PN6	K	f	Holes NO. f	D PN16	K	f	Holes NO. f	D ANSI150	K	f	Holes NO. f
20	325	235	150	7	220	85	8	90	65	11	4	105	75	14	4	98.4	70	16	4
25	325	240	160	9	225	90	9	100	75	11	4	115	85	14	4	108	79	16	4
32	360	295	180	14.5	270	105	15.5	120	90	14	4	140	100	18	4	118	89	16	4
40	360	300	200	15	275	115	16	130	100	14	4	150	110	18	4	127	98	16	4
50	360	305	230	16.5	275	125	19	140	110	14	4	165	125	18	4	152	121	19	4
65	405	330	290	24.5	295	145	22.5	160	130	14	4	185	145	18	4	178	140	19	4
80	405	365	310	30	325	155	27	190	150	18	4	200	160	18	8	190	152	19	4
100	445	420	350	47	360	175	42.5	210	170	18	4	220	180	18	8	229	191	19	8
125	445	435	400	62	370	200	58	240	200	18	8	250	210	18	8	254	216	22	8
150	445	450	480	78.5	375	225	71	265	225	18	8	285	240	22	8	279	241	22	8
200	460	535	600	137	425	275	123	320	280	18	8	340	295	22	12	343	298	22	8

Valvole a rapida chiusura a mezzo cavo metallico PN6-PN16-ANSI150
Quick closing valves by means of metallic cable NP6-NP16-ANSI150

Tab.131

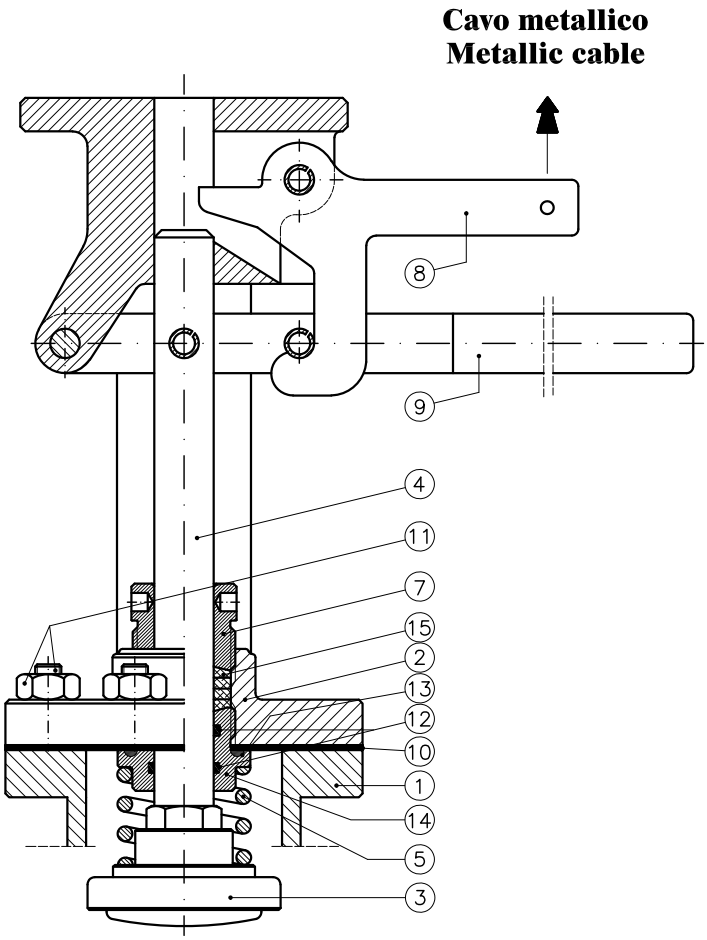

Combinazione materiali standard – Standard materials Combination					
		GS/316	A/316	B/316	G/316
ITEM	DENOMINAZIONE DENOMINATION	MATERIALE MATERIAL	MATERIALE MATERIAL	MATERIALE MATERIAL	MATERIALE MATERIAL
01	Body	Nodular cast iron EN-GJS-400-15U UNI EN1563	Cast steel GP240-GH UNI EN10213	Bronze UNI EN1982 G-CuSn5Zn5Pb5	Cast iron UNI EN1561 EN-GJL-250
02	Bonnet	Nodular cast iron EN-GJS-400-15U UNI EN1563	Nodular cast iron EN-GJS-400-15U UNI EN1563	Bronze UNI EN1982 G-CuSn5Zn5Pb5	Nodular cast iron EN-GJS-400-15U UNI EN1563
03	Disc (≤ DN80)	Stainless steel AISI316 UNI EN10088	Stainless steel AISI316 UNI EN10088	Stainless steel AISI316 UNI EN10088	Stainless steel AISI316 UNI EN10088
03	Disc (≥ DN100)	Cast steel GP240-GH UNI EN10213 plus AISI316 facing welding	Cast steel GP240-GH UNI EN10213 plus AISI316 facing welding	Cast steel GP240-GH UNI EN10213 plus AISI316 facing welding	Cast steel GP240-GH UNI EN10213 plus AISI316 facing welding
04	Stem	Stainless steel AISI316 UNI EN10088	Stainless steel AISI316 UNI EN10088	Stainless steel AISI316 UNI EN10088	Stainless steel AISI316 UNI EN10088
05	Spring	Steel UNI EN10270	Steel UNI EN10270	Steel UNI EN10270	Steel UNI EN10270
07	Stuffing box	Steel UNI EN10025	Steel UNI EN10025	Brass CW617N (OT58)	Steel UNI EN10025
08	Release lever	Steel UNI EN10025	Steel UNI EN10025	Steel UNI EN10025	Steel UNI EN10025
09	Resetting lever	Steel UNI EN10025	Steel UNI EN10025	Steel UNI EN10025	Steel UNI EN10025
10	Gasket	Planiflex KG carbo/C PF81	Planiflex KG carbo/C PF81	Planiflex KG carbo/C PF81	Planiflex KG carbo/C PF81
11	Nuts and bolts	Galvanized Steel 8.8 EN20898-1	Galvanized Steel 8.8 EN20898-1	Galvanized Steel 8.8 EN20898-1	Galvanized Steel 8.8 EN20898-1
12	OR gasket	Viton	Viton	Viton	Viton
13	OR gasket	NBR	NBR	NBR	NBR
14	Gland	AVP Steel UNI EN10277	AVP Steel UNI EN10277	Brass CW617N (OT58)	AVP Steel UNI EN10277
15	Packing	Kevlar graphite KGL	Kevlar graphite KGL	Kevlar graphite KGL	Kevlar graphite KGL
Nota: Combinazioni materiali non standard a richiesta Note: Non standard materials combinations on request					